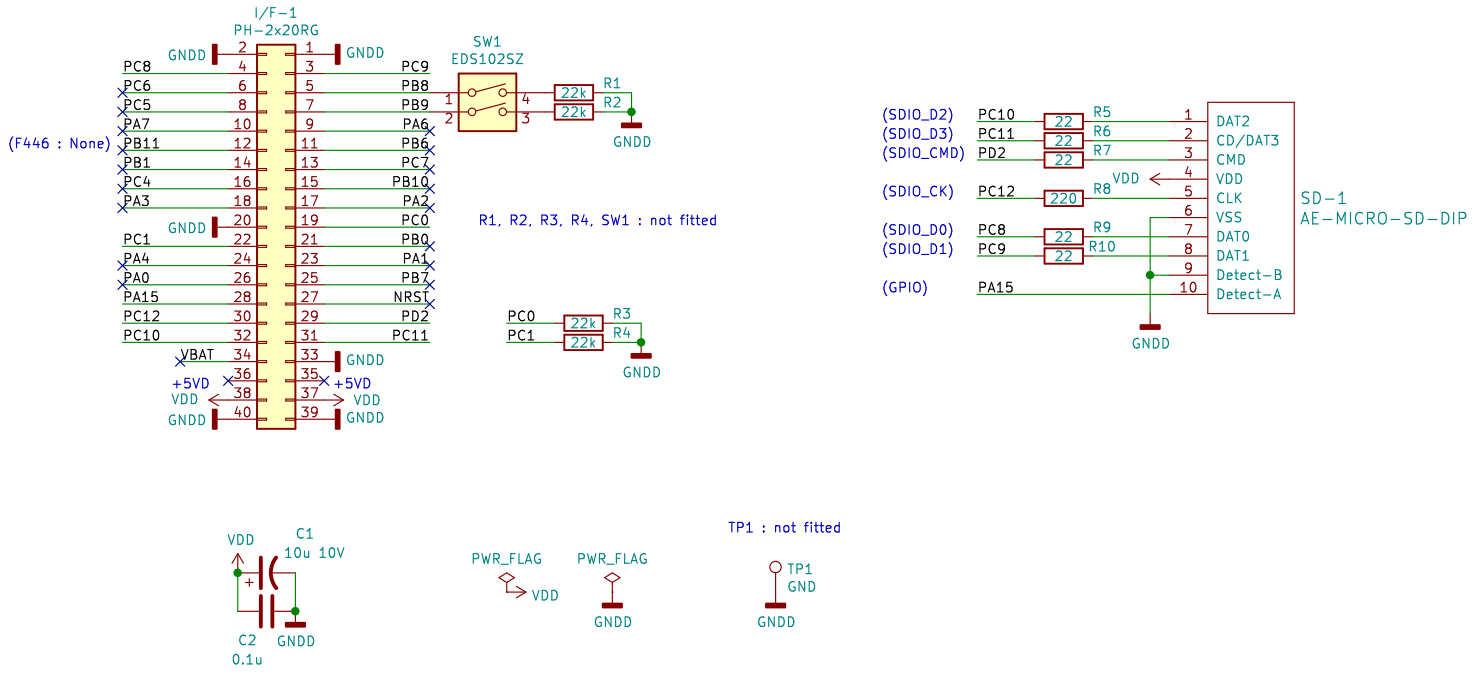

Revive

Sheet: /
File: IF_N446RE_SD_SDIO.sch

Title: IF-N446RE-SD-SDIO-V1

Size: A4	Date: 2021-09-03	**Rev: 1**
KiCad E.D.A. kicad (5.1.9)-1		Id: 1/1